图片型号 PICTURE MODEL：BBM1265

Marine Barin Marie
船用电热保温桌

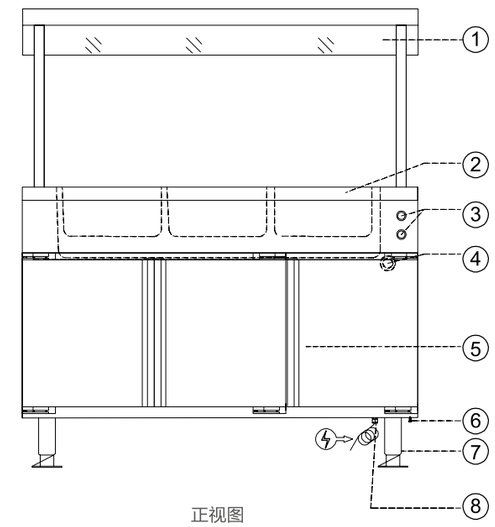

正视图
FRONT

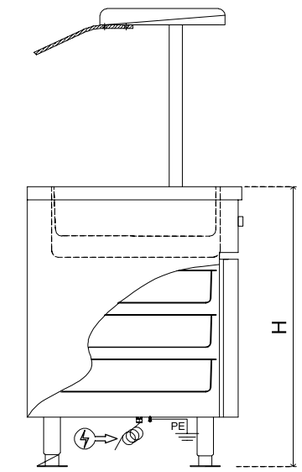

左视图
LEFT

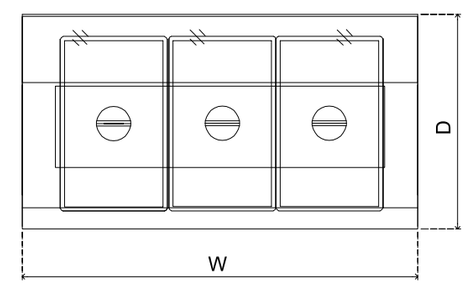

俯视图
PLAN

① 玻璃罩 Glass Cover
② 1/1GN 份数盘 1/1GN Container
③ 电源开关 Power Switch
④ 温控器 Temp.Control
⑤ 磁吸门 Magnetic Door
⑥ 接地螺栓 Earthing
⑦ 船用可调节底脚 Marine Adjustable Leg
⑧ 电源线 Electric Cord

- 全不锈钢结构
  S/S execution
- 加热方式有干烧和水烧两种形式可选
  Dry-Heating and Wet-Heating (optional)
- 台面按照标准 GN 份数盘尺寸设计
  The top is designed according to standard G/N size
- 可选择单侧或双侧透明卫生罩
  Either single-sided sneeze guard or double-sided sneeze guard is available
- 柜内可选配普通储物柜或热柜
  The cabinet can be made into common storing cabinet or heating cabinet
- 可选配照明灯或暖食灯
  Light or heat radiator (optional)

设备名称 Equipment	型号 Model	容量 Capacity	功 率 Rating	电 制 Voltage	尺 寸 Size (W×D×H)	重 量 Net Weight
船用电热保温桌 Marine Bain Marie	BBM0865	2x1/1GN-150mm	2kW	220V/1/50Hz 230V/1/60Hz	800x650x850mm	59kg
船用电热保温桌 Marine Bain Marie	BBM1265	3x1/1GN-150mm	2kW	220V/1/50Hz 230V/1/60Hz	1200x650x850mm	69kg
船用电热保温桌 Marine Bain Marie	BBM1665	4x1/1GN-150mm	2.8kW	220V/1/50Hz 230V/1/60Hz	1600x650x850mm	130kg
船用电热保温桌 Marine Bain Marie	BBM2065	5x1/1GN-150mm	2.8kW	220V/1/50Hz 230V/1/60Hz	2000x650x850mm	157kg

卫生罩、暖食灯、照明灯、热柜（可选购）
Sneeze Guard, Heat Radiator Light, Light and Heating Cabinet (optional)